Project	
Date	
Prepared By	
Model #	FL30CCTBK1S

LED Floodlight

4500 Lumens, 30 Watt, Color Selectable

ORDER CODE:
11826

MODEL NUMBER:
FL30CCTBK1S

Specifications

ELECTRICAL

Watts: 30
Voltage: 120/277VAC
Power Factor: 0.882
THD: 13.05%
Operating Temp. Range: -40°F to 131°F

LIGHT

Initial Lumens: 4500
Lumens per Watt: 150
Color Temperature: 3000K, 4000K, 5000K
CRI: 82

AGENCY APPROVALS

cUL: Yes
UL: Yes
RoHS: Yes

PRODUCT DETAILS

Lens: Acrylic
Warranty: 5 years
Fixture Rated Life: 50,000 hours

Norton Shores, Michigan 49441
T: 231.332.1188 | F: 231.726.5029
TOLL FREE: 866.632.7840
www.earthtronics.com

PRODUCT DESCRIPTION

The EarthTronics LED Floodlight provides security and general area illumination directed where required. Textured architectural bronze powder coat finish with high impact acrylic lens. This 30 watt floodlight operates at 150 lumens per watt efficiency and provides 4500 lumens. Switch between 3000K, 4000K, and 5000K easily at the time installation. Accepts 120/277 volt AC power supply. The long 50,000 hour is backed up with a 5 year warranty.

PRODUCT FEATURES

+ 120/277VAC 50-60Hz
+ 50,000 hour rated life
+ 5 year warranty, 10 year limited
+ 3 color light selection 3000K, 4000K & 5000K
+ Easy installation
+ Wide flood 150° beam angle (10%)
+ Ships standard with knuckle joint
+ Yoke mount is available

APPLICATIONS

+ Commercial Building
+ Advertising Lighting
+ Landscape Lighting

Please consult installation instructions for proper application and use of this fixture.
*Rebate availability access it here: www.earthtronics.com/rebate-finder

LED Floodlight

4500 Lumens, 30 Watt, Color Selectable

PRODUCT DIMENSIONS

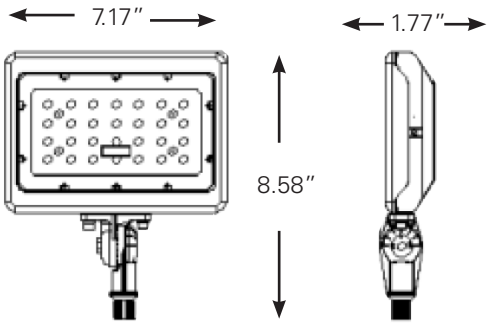

LIGHT DISTRIBUTION CURVE

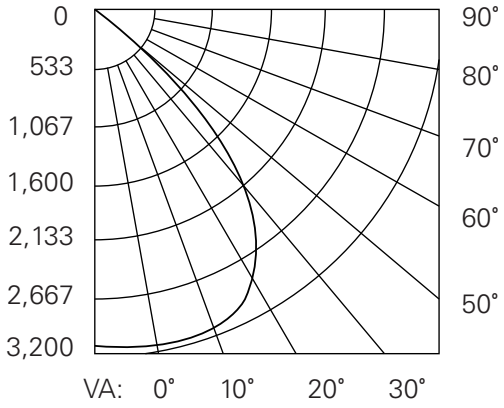

PACKAGE DETAILS

INDIVIDUAL PACKAGE

Individual Carton Qty: 1

Dimensions:
11.22″ Length x 9.25″ Width x 2.76″ Depth

Weight: 4.18 LBS

UPC: 840791118269

MASTER CARTON

Master Carton Qty: 8

Dimensions:
19.17″ Length x 11.81″ Width x 12.20″ Height

Weight: 24.69 LBS

UPC: 84079111826900

OPTIONAL ACCESSORIES

Yoke Mount
Order Code: 11829

Easily access our DLC qualified products with rebates in your area.
ACCESS IT HERE: Rebate Finder - LED Floodlight
www.earthtronics.com/rebate-finder/catalog/

EarthTronics, Inc. | Muskegon, MI 49441 | www.earthtronics.com | Email: contact@earthtronics.com
Toll Free: 866.632.7840